Wiring Diagram & Terminal Configuration For Adjustable Delay Timer Relay (Delay ON or OFF)

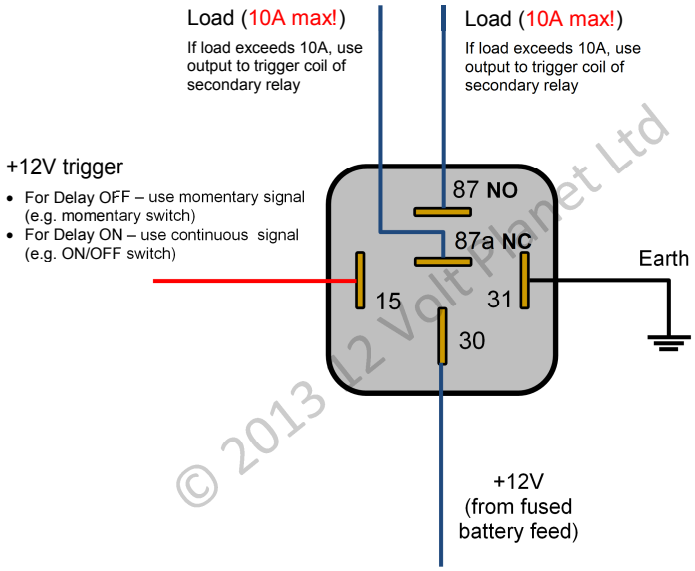

© 2013 12 Volt Planet Ltd